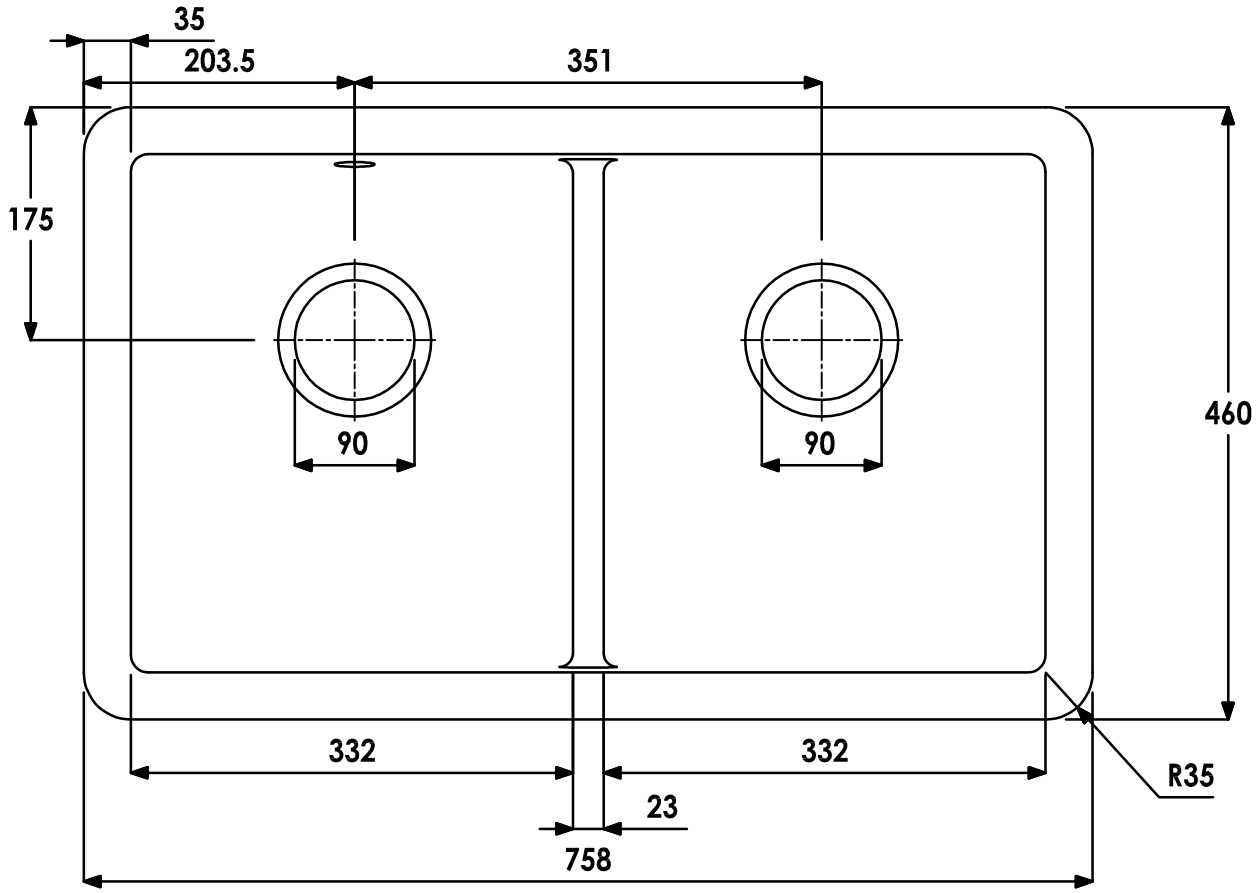

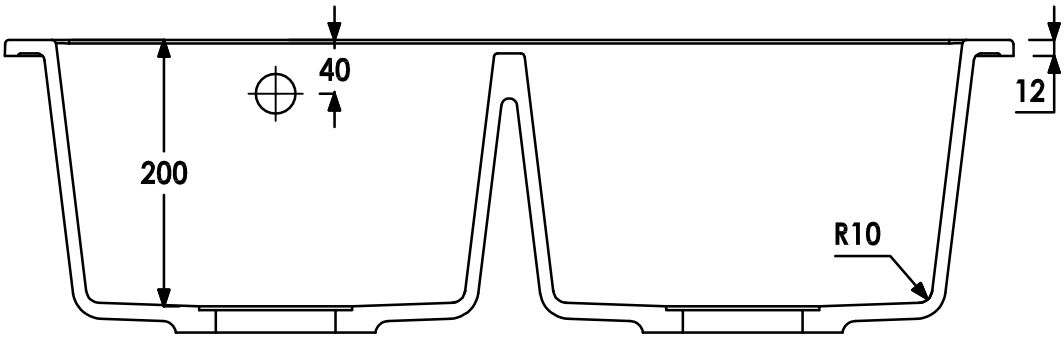

UNDERMOUNT CUT OUT

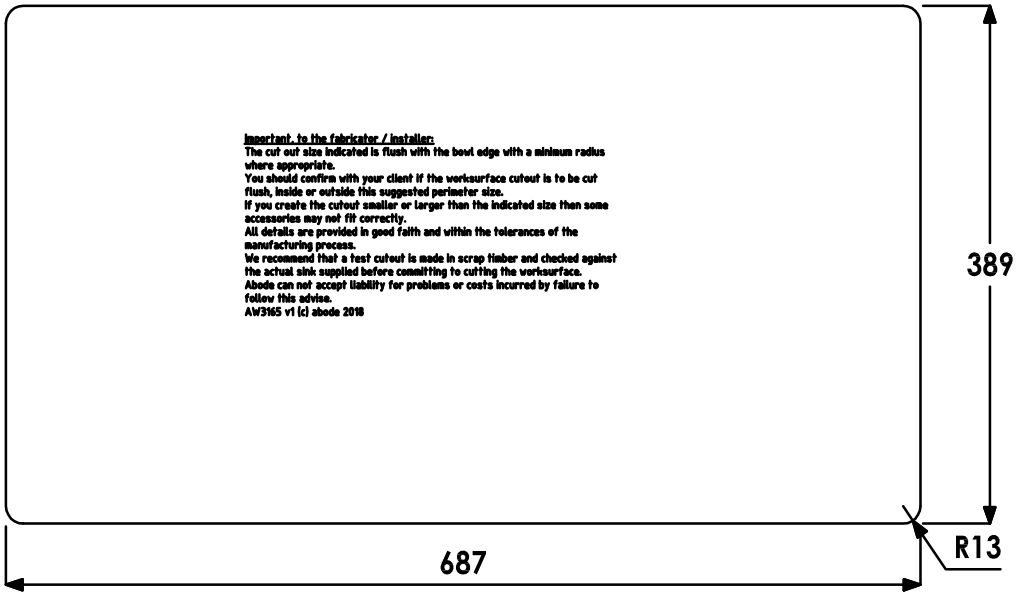

Important, to the fabricator / installer:
The cut out size indicated is flush with the bowl edge with a minimum radius where appropriate.
You should confirm with your client if the worksurface cutout is to be cut flush, inside or outside this suggested perimeter size.
If you create the cutout smaller or larger than the indicated size then some accessories may not fit correctly.
All details are provided in good faith and within the tolerances of the manufacturing process.
We recommend that a test cutout is made in scrap timber and checked against the actual sink supplied before committing to cutting the worksurface.
Abode can not accept liability for problems or costs incurred by failure to follow this advise.
AW3165 v1 (c) abode 2018